Barry Industries

75W 10dB DC-3GHz AlN Flanged Attenuator

AA1000-75-1X

AA1000-75-1X Features:

- Flange Mount
- RoHS Compliant
- Customer Defined Testing Available
- High Rated Power
- Covered Resistive Element

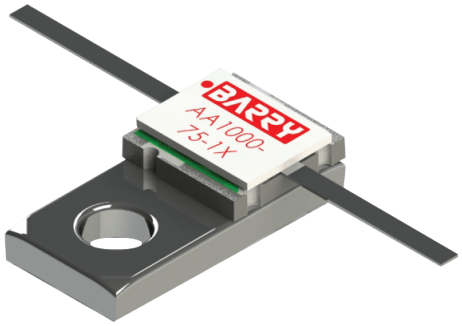

AA1000-75-1X Parameters:

Nominal Attenuation:	10dB
Operating Frequency:	DC - 3GHz
Attenuation Tolerance:	±1dB
Return Loss (Typical)*:	22dB or Better
Input Power:	75W**
Impedance:	50Ω
Resistor Construction:	Thick Film on AlN
Flange Construction:	Silver Plated Copper
Lead Construction:	Silver Plated Copper
Operating Temperature:	-55 to +150°C

AA1000-75-1X Power Derating Curve

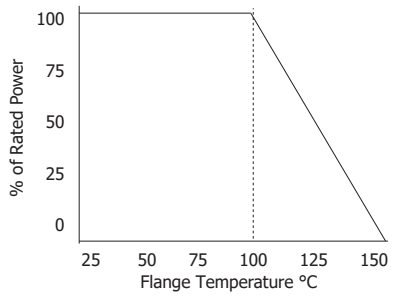

AA1000-75-1X Dimensions:

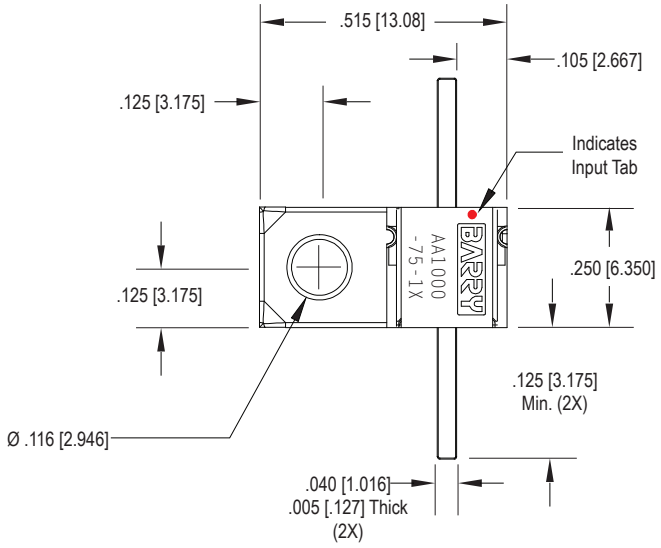

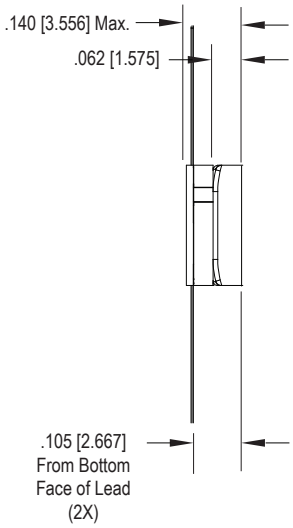

Dimensions in inches [mm]
Tolerance is ± 0.010 [0.254]
unless otherwise stated

* In a matched, continuous 50Ω system with proper workmanship
** Rating based on ≤100°C constant baseplate temperature

Ordering Information:

AA 1000 - 75 - 1X

- AA: Prefix for Flanged Attenuator with AlN Substrate
- 1000: Value Code — 1000 - 10dB
- 75: Input Power — 75 - 75W
- 1X: Assigned by Factory

Barry Industries reserves the right to change part number and/or process without notification.

AA1000-75-1X Reliability Data:

Parameter:	Test Condition:	Results:
Short Time Overload	Apply 1.1x Rated Power for 5 Seconds.	≤ 5.0% Resistance Shift
Rated Load Life	Apply 1/2 Power Under 40°C ±2°C 90 Minutes on/ 30 Minutes off. Repeat for 100 hours	≤ 5.0% Resistance Shift
Moisture Resistance	MIL-PRF-55342 para.4.8.9 95% RH, 25°C - 65°C	≤ 5.0% Resistance Shift
Resistance to Soldering Heat (Lead)	MIL-STD-202 Method 210 Test Condition "A"	≤ 5.0% Resistance Shift
Resistance to Soldering Heat (Assembly)	MIL-STD-202 Method 210 Test Condition "J"	≤ 5.0% Resistance Shift
Terminal Strength	MIL-STD-202 Method 211 Test Condition "A" 3lbs. Test Condition "B" 5 bends	No Significant Abnormality (Visual)
Solderability (Lead only)	MIL-STD-202 Method 208 Test C	>95% Covered
High Temperature Storage	125°C ±2°C for 500 Hours	1.) ≤ 5.0% Resistance Shift 2.) No Significant Abnormality (Visual)
Thermal Shock	-5°C to +150°C 30 Minutes Dwell, 5 Cycles	1.) ≤ 5.0% Resistance Shift 2.) No Significant Abnormality (Visual)